Choosing Metallurgical Samplers or Static Cutters for Process Control in Slurry: when or why to avoid the Increment Delimitation Error

Reinaldo Novaes[a] and Michael Hidding[b]
[a]Rua José Dolles, 264 · Votorantim · SP 18116-710 · Brazil, E-mail: Reinaldo.Novaes@FLSmidth.com
[b]Osborne Park, Perth WA 6916, Australia, E-mail: Michael.Hidding@FLSmidth.com

Despite "sample collecting", with the objective of evaluating the quality of a material lot, being a very ancient activity, and many books and papers being published with the purpose of "educating" the sampling community, we can say that the Theory of Sampling - TOS (developed by Pierre Gy) is the one that gave the best approach of the potential, and most common, errors of this activity.

The focus of TOS in the early days was primarily dry particulate material, maybe because it presents bigger challenges in terms of heterogeneity, but there are other areas that have discovered the use of this precious tool to solve the same issues on many other kinds of materials, but it is still not universally adopted. For instance, there is a belief that liquids are completely homogenous, as if every liquid have the same behaviour as water, but it is not true, especially when we talk about mixed materials, not soluble between them, and with different densities. For instance, ore slurries (pulp), is a suspension formed by pulverized ore, flotation reagents and process water

This slurry may seem a homogenous substance, looking from the top of a flotation cell or discharging in a thickener, but, any fluid, flowing in a pipe develops a specific profile of speed which is dependent of the rheology and of the pipe wall friction, etc. Other important variables to consider in the make-up of mineral suspension include the concentration gradients through the flow profile and specific gravity of the particles.

This work evaluates the types of slurry samplers or static cutters to answer the question: "Which equipment do I really need?" The answer to this question will help the project owner make the correct decision for plant sampling – including longer term viability.

About Slurries

In basic terms slurry is a mix of ore and water but, in the real world, slurry is actually a mix of pulverized ore of unknown constitution, with a characteristic size distribution curve, plus flotation reagents and a very diluted solution of an unimaginable combination of solutes, called process water. If we take notice of these parameters, it is impossible to imagine something homogeneous made in this way.

Of course, it all seems homogenous when you look from some distance, or when the material is flowing in channels but, as the slurry is not a clear liquid, it is impossible to see inside the material and to see the particles behaviour without some special tools. Thus, it is very difficult to guarantee whether the material is homogeneous or not - it is a dangerous assumption to believe it is.

However, when compared with dry ore, which has generally bigger particles and possibly a wider range of distribution, slurry seems i "homogeneous", or accurately speaking, less heterogeneous. However, the segregation issues are still in place with a different name - sedimentation in comparison to dry ore where any movement causes segregation, with slurry the movement is necessary to avoid it. Slurries need to be under agitation.

Figure 1. Slurry and dry ore.

Slurry sampling

An engineer or plant designer, unfamiliar with the complexities of slurry sampling, visualises a perfect flow of a homogeneous material and therefore believe it is appropriate just to use any kind of deviation flow to "take a sample", even if they know the basics of sampling theory.

doi: https://doi.org/10.1255/tosf.147

Once you understand the general idea about the characteristic, behaviours and especially the heterogeneity of slurries, it will only then be possible to think about how to sample this material correctly. To define the best sampling solution, it is crucial to know about the material process (e.g.is it a gold processing or a copper concentrate plant?) and to know about the purpose of your samples (quality control, process control, metallurgical accounting). Besides this, there are some other characteristics that must also be checked.

- Movement – the slurry needs to be in constant movement to create an almost one-dimension spatial distribution to be cut.
- Pressure – to evaluate the possibility to cut the flow without breaking the pressure, creating a spray where it is impossible to take a proper cut.
- Speed – to evaluate the possibility of cutting the flow without losing material from the cutter spoon.
- Additives – to evaluate the behaviour of the material and decide the best drainage angles, apertures, agitation need, etc.
- Particle Size Distribution – big range means big segregation issues.
- Solid content – to evaluate the behaviour of the material and decide the best drainage angles, apertures, agitation need, etc
- Temperature – Generally disregarded, but temperature changes the viscosity and consequently the flowability, so again drainage angles, apertures and agitation need attention especially for the regions with a big difference between day and night temperatures.

With knowledge of these parameters, it is possible to start selecting the best fit for purpose sampling equipment.

Lack of knowledge

Mining companies are being pushed by communities, investors, employees and sometimes even owners, to provide clear and confident information about results. And, to fulfil demands they are looking for engineering companies which usually have more knowledge about sampler installation, not about sampling. Unfortunately, the knowledge of correct sampling is still restricted a small group in the industry.

With technological development of the capital equipment and processes used in the mineral industry, the sizes of the flows are growing considerably, increasing the need for appropriate space to install a proper sampler. This means generally extra height, in turn leading to bigger structures and bigger investments; so, engineering teams, without proper knowledge, looking to reduce constructions costs, and based on the false idea about the slurry homogeneity, are presenting “magical” solutions with deflectors, deviations flows, pressure pipe and other static cutters

“The sampling operation of a flowing stream is usually performed by one of the three following schemes:

- Taking the whole stream part of the time. Figure 2
- Taking part of the stream all the time. Figure 3
- Taking part of the stream part of the time. Figure 4

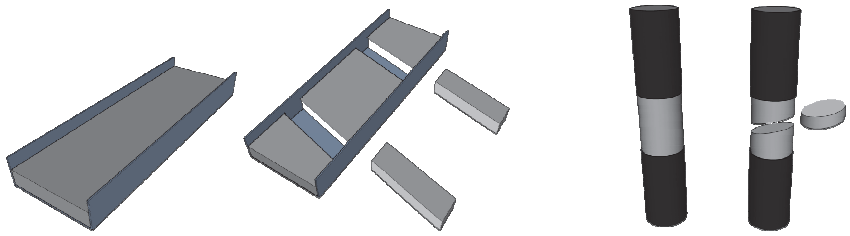

Figure 2. Whole stream taken

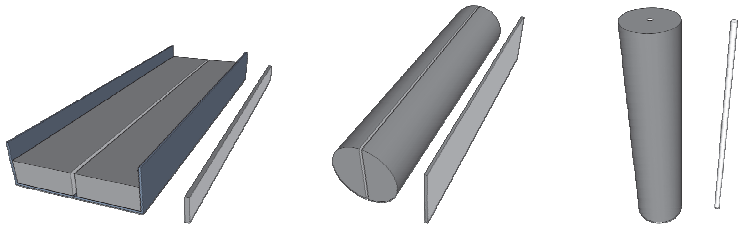

Figure 3. Partial stream all the time

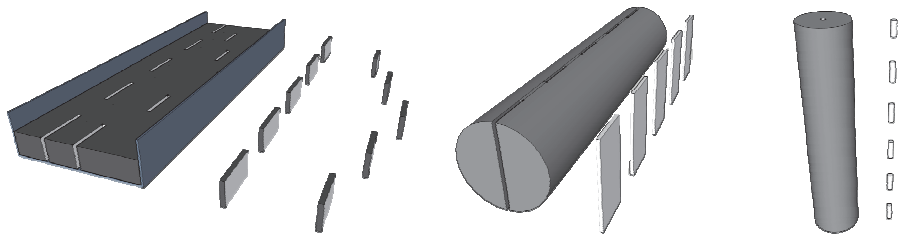

Figure 4. Partial stream partial time

As mentioned by many authors, it is impossible to take a sample, or correct sample, using static cutters (figures 2 or 3), it will be always biased due the Incorrect Delimitation Error. No metallurgical account can be carried out based on the results from that collected material.

However, the material collected by these device types, once sent to Online Analysers, can produce a very good and fast answer about the variations of the process permitting a more effective process control. It can be very useful for processing plants that receives material from different mining areas or even the different suppliers. With a good analyser is possible to get many results per hour, offering a good curve of the process variation and permitting many adjustments.

Based on the above, the same engineering team are completely confident that this “magical” solution can provide a representative sample. The same thoughts are being used to defend the use of pipe deviator; a small pipe came from a big one to reduce the flow size to take a small “sample size”.

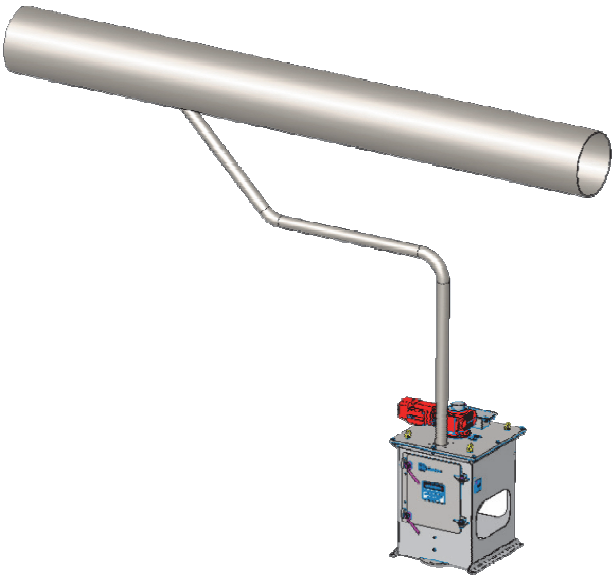

Figure 5. Pipe deviator

On the other hand, the serious engineering teams are trying to build good systems, including correct samplers, or better, correct sampling systems. But too often the purchaser or engineering responsible, know very little about representative sampling so generally they prefer the “simple solution”.

Metallurgical Samplers X Static Cutters

A sample or increment is a relatively small quantity of material, so taken from a lot as to be representative in respect of the quality characteristics to be assessed. If it is not representative, it is not a sample, just a mis-illustration of the lot.

Following this line of thinking, only metallurgical samplers can be called Samplers, so, to facilitate the understanding we use the expression Sampler for metallurgical devices and Static Cutter for the other devices.

A Sampler is a device to take increments from a one-dimensional stream of material, in the following conditions:

- The linear or circular velocity of the cutter spoon be constant during all the time necessary to cross the entire stream.
- The velocity remains uniform during the collection of all increments
- Geometry of the cutter spoons: for a straight trajectory, the edges should be parallel and for a circular trajectory, edges should be radial.
- The increment is the portion of the one-dimensional stream taken each time the cutter spoon crosses the stream
- The cutter spoon volume and aperture should be generous enough to ensure that the cutter behaves as correct as possible (paying attention to high solids content, froth factor, etc)

A Static Cutter is a device where apertures, circular or rectangular, are installed in the stream path, to deviate a part of this stream, in the following conditions:

- For pressurized flows, the aperture should be circular, and the flows shall be on the ascending vertical pipe.
- For gravitational flows, the aperture should be proportional to the pipe shape, circular for pipe and rectangular for box, launders, and square pipes.
- The aperture should be enough to permit the material enter freely (attention high solids content, froth factor, etc).
- More apertures give more opportunities for the flow but may still be just as biased as single apertures.

In other words, to be absolutely clear to take a metallurgical sample, representative enough of the entire lot, it is mandatory to take a complete section of the free-falling stream. Any deviation of this rule will generate a Delimitation Error which will affect the results of the evaluation.

A Static Cutter is not a Sampler, but it can be an important tool to control the processes and can be used under certain conditions.

Engineering phase - How to choose the best solution?

Any project, during the engineering phase, should consider all requirements of the processes and quality controls, including the sampling points. Some parameters, such as the following, should be defined:

- In order to close the loop for metallurgical accounting, what/where are the main points for control of the overall process?
- For process plants, what is the frequency of the metallurgical accounting period
- What are the critical process control parameters?
- Where will the collection/sampling points be located?
- What level of automation to control the process, once the sample is collected, will be used?

With this information it is possible to evaluate the reason for sampling, which determines height and clearance required to install appropriate Samplers. It can also help to define a layout that permits the optimum collection of material (and pipe routing) for a centralized on-line analyser.

Some examples

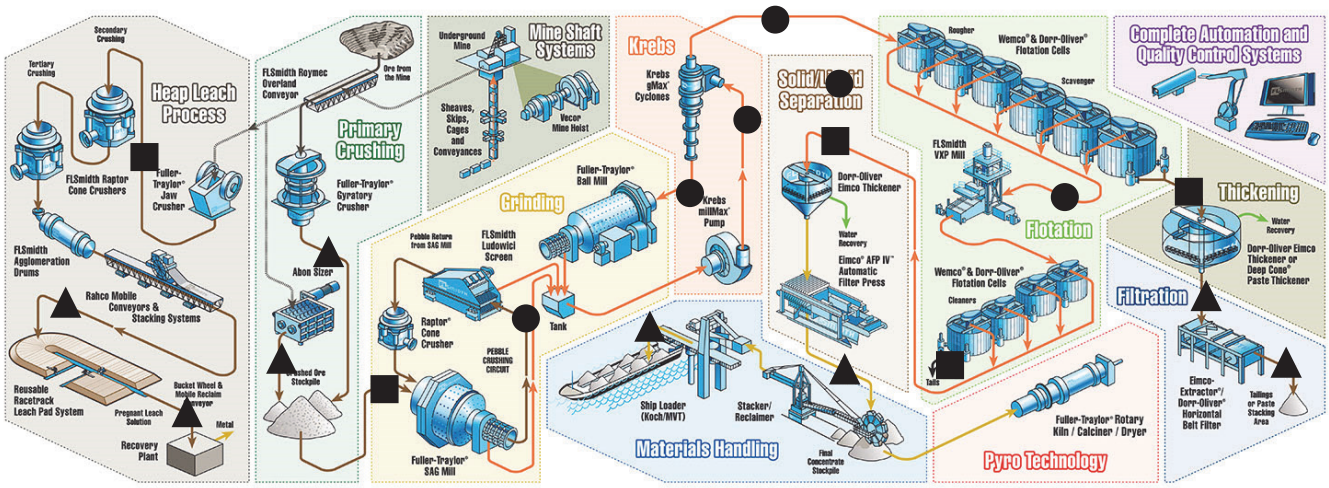

Figure 6. Samplers and Static Cutters location.

In the figure the circles represent Static Cutters, and the squares represent Samplers in the most common application points and the triangles show alternatives points of installation for Samplers.

The Static Cutters can be replaced by Samplers when the process evaluation is a critical stage of the process. The opposite, replacement of Samplers by Static Cutters, cannot be done,

For metallurgical accounting it is crucial to know the inputs and outputs of the process, for:

- Plant feed
- Final product (concentrates)
- Tailings

In this application the devices should be Samplers, even if the samples also need to be sent for quick analysis, for process control. A different frequency of cuts can be applied to attend both needs; feed the analyser and create a global sample to send to the lab.

Special care is needed with the direction and distance between the sampler and the analyser, if the increment discharge is intermittent.

For process control the idea is the same as accounting, but with some circular flows, (e.g. for mills and cyclones) it is more difficult, so it is also important to know the ‘bottlenecks” of the process to decide where to install the Static Cutters, that will feed the analysers.

The same care about direction and distance can be taken in the Static Cutters, but in this application a constant gravity or pumped flow (without buffer or other type of holding tanks) can be provided to avoid sedimentation on the analyser feed pipeline

Final comments

It is easy to be confused with the sampler types, especially with some devices that promise metallurgical results but are also biased. Maybe they can be considered less biased than some options or even manual ”sampling” and, due to a lack of knowledge, the engineering companies choose them because they are looking for less expensive solutions. Solutions that require less head height, less space and minimal interferences on the drawings they have already done but pay no attention to the integrity of the results.

It is very common to see requests for one single stage sampler, without information about the sample purpose and then to ask the manufacturer to specify the number of increments, increment size and final sample mass. This demonstrates the unfamiliarity about TOS and highlights the work still to be done by the sampling community. If the final customer is involved in the process, the risk of not fairly comparing systems (between single stage and a compliant system) is less, however it can still happen, and here too more education is required.

Conclusion

Samplers and Static Cutters are reliable devices for different applications and can be used for most processes. Each commodity, each project, each plant is unique and needs to be evaluated under the proper characteristics in terms of process, and consequently, in terms of sampling needs.

To choose the proper device for each application is a simple task, but it requires knowledge - so is important to look for the specialists help. If implemented correctly the right sampler can save a lot of money during the plant operation.

Proposal

Based on the dialog above, I am proposing to avoid the use of the expression SAMPLER for any kind of device that does not meet the definition of a true cross-stream sampler. This subtle change in description could save a lot of confusion when purchasing decisions about sampling equipment are taken.

References

1. Pitard, F.F., 1993, Pierre Gy's Sampling Theory and Sampling Practice, 2nd Edition, CRC Press LLC, Boca Raton, FL.
2. A.C. Chieregati and F.F. Pitard, "Fundamentos teóricos da amostragem", in Teoria e prática do tratamento de minérios: manuseio de sólidos granulados. Chaves, A.P. (Org.), Signus Ed., Sao Paulo (2011), pp. 299–338.